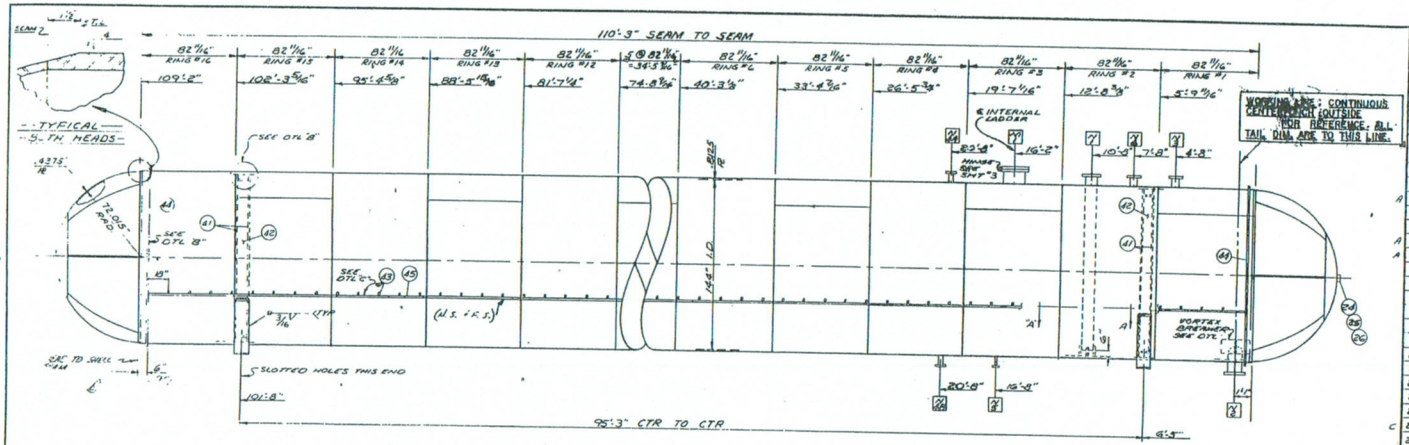


ELEVATION

CUSTOMER NOTE:
PLEASE LOCATE & GIVE DETAILS FOR LADDER & PLATFORM CLIPS

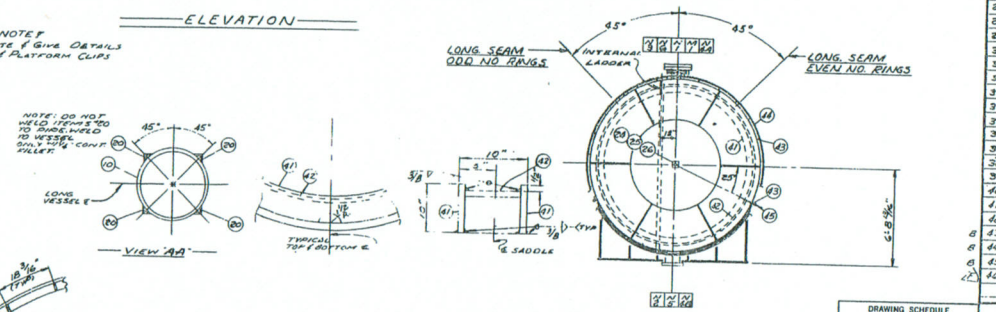


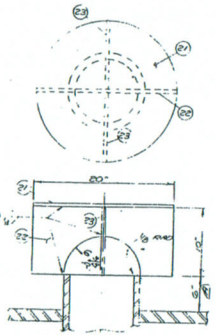


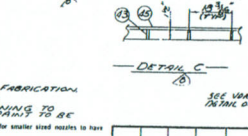


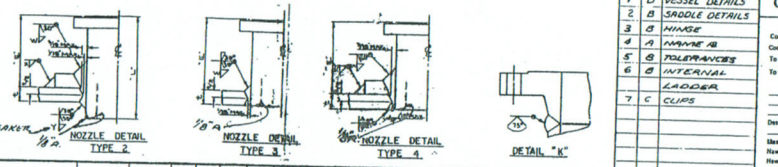


## BILL OF MATERIAL FOR ONE TANK

| ITEM NO. | NO. REQ'D | DESCRIPTION |
|---|---|---|
| 1 | 2 | HEAD, HEMI, A-516-70, FBX. 144.03" I.D. x .4375" THK. PER ORDER NO. 212763 |
| 2 | 16 | R, A-516-70, FBX .8125" THK. x 83 3/16" x 456" |
| 3 | 1 | R, A-516-70 FBX. 1/2" x 6 5/8" x 55" |
| 4 | 1 | FLG, W.N., 18"-150# ASA w/1/16" RF #17" BORE, A-105-11 |
| 5 | 1 | FLG, BLIND, 18"-150# ASA PER DWG "6-3A836-E, A-516-70 |
| 6 | 1 | GASKET, 18"-150" x 1/16" THK, NA-60 |
| 7 | 16 | STUDS, ALLOY STL, 1 1/8" DIA x 6" LG, A-193 B7 |
| 8 | 32 | NUTS, HEX, 1 1/8" NVY, A-194-2H |
| A 9 | 1 | PIPE, 12" x STD SMLS x 12 3/8" LG, A-106-B |
| 10 | 1 | PIPE, 10" SCH 60 SMLS x 11' 11 1/8" LG, A-106-B |
| 11 | 2 | PIPE, 6" SCH 80 SMLS x 6 3/8" LG, A-106-B |
| A 12 | 2 | PIPE, 3" SCH 80 SMLS x 7 1/16" LG, A-106-B |
| A 13 | | |
| 14 | 1 | PIPE, 2" SCH 160 SMLS x 6 11/16" LG, A-106-B |
| 15 | 1 | FLG, W.N., 12"-150# ASA w/1/16" RF 1-STD BORE, A 105-11 |
| 16 | 1 | FLG, W.N. 10"-150# ASA w/1/16" RF 1 SCH 80 BORE, A-105-11 |
| 17 | 2 | FLG, W.N. 6"-150# ASA w/1/16" RF 1 SCH 80 BORE, A-105-11 |
| 18 | 2 | FLG, W.N., 3"-150# ASA w/1/16" RF 1 SCH 80 BORE, A-105-11 |
| 19 | 1 | FLG, W.N., 2"-150# ASA w/1/16" RF 1 SCH 160 BORE, A-105-11 |
| 20 | 4 | R, M-1020, 1/2" x 1/2" x 1/2" x 10" LG |
| 21 | 1 | R, A-283-C, 1/4" x 20" DIA |
| 22 | 1 | R, A-283-C, 1/4" x 10" x 20" |
| 23 | 2 | R, A-283-C, 1/4" x 9 3/8" x 10" |
| 24 | 1 | NAME R, CONTRACT PER DWG "6-9A412-C, SS |
| C 25 | 1 | SHT, HRS, #14 GA x 5" x 2 3/4" |
| 26 | 4 | #6 PARKER-KALON TYPE 'U' DRIVE SCREWS x 3/8" LG, CAD R |
| 27 | 1 | FLG PROTECTOR, 18"-150", MASONITE |
| 28 | 1 | FLG. PROTECTOR, 10"-150", MASONITE |
| 29 | 2 | FLG. PROTECTOR, 6"-150", MASONITE |
| 30 | 2 | FLG. PROTECTOR, 3"-150", MASONITE |
| 31 | 1 | FLG. PROTECTOR, 2"-150", MASONITE |
| 32 | 170 | LBS. WELD WIRE |
| 33 | 170 | LBS WELD FLUX |
| 34 | 600 | LBS. ELECTRODE |
| 35 | 1 | R, A-516-70 FBX, 3/4" x 18 3/8" I.D. x 34" O.D. |
| 36 | 1 | R, A-516-70 FBX, 11/16" x 11 1/8" I.D. x 19 3/8" O.D. |
| 37 | 1 | R, A-516-70 FBX, 13/16" x 13 1/8" x 23 3/4" O.D. |
| 38 | 2 | R, A-516-70 FBX, 5/8" x 7" I.D. x 12" O.D. |
| 39 | 1 | R, A-516-70 FBX, 5/8" x 3 1/8" I.D. x 8 7/8" O.D. |
| 40 | 1 | R, A-516-70 FBX 5/8" x 3 1/8" I.D. x 8 7/8" O.D. |
| 41 | 4 | R, A 285-C, 1/2" x 73" x 78 1/2" (SIX SEGMENTS) |
| 42 | 2 | R, A-283-C, 1/2" x 7" x 33 7/16" |
| B 43 | 192 | BAR, M-1020, 1/2" DIA x 1" LG |
| B 44 | 2 | BAR, M-1020, 1/2" DIA x 38 1/2" |
| B 45 | 2 | BAR, M-1020, 1/2" DIA x 109 1/2" |
| C 46 | 30 | GAL. PAINT, COOKS #920-R-148 |

CUSTOMER JOB NO. 34-5012 ITEM NO. V-1010

CUSTOMER ORDER NO. 34-5012-13 NO. REQ'D. ONE

### DRAWING SCHEDULE

| SHT. NO. | SIZE | DESCRIPTION |
|---|---|---|
| 1 | D | VESSEL DETAILS |
| 2 | B | SADDLE DETAILS |
| 3 | B | HINGE |
| 4 | A | NAME R |
| 5 | B | TOLERANCES |
| 6 | B | INTERNAL LADDER |
| 7 | C | CLIPS |

### DESIGN NOTES

Construction: All Welded.
Code: ASME (Div.1), Edition: SECTION VIII; Latest Revision
To Be Stamped By: AMF BEAIRD, INC.
To Be Inspected By: THE COMMERCIAL UNION INSURANCE COMPANY OF NEW YORK

Joint Eff.: Head 100% Shell 100%
Design Stress 17,500 P.S.I. Heads 17,500 P.S.I. Shell
NATIONAL BOARD NO.
Postweld Heat Treatment (a) [redacted] Required (See Note 13)
Radiography (c) [redacted] Required (See Note 6)

Design Pressure 180 P.S.I. Design Temp. 130 °F.

Max. Allow. Working Press. P.S.I. Limited By
New, Cold 136 SHELL
New, At 600 °F 180 FLANGES
Corroded At 600 °F 180 FLANGES
Hydrostatic Test Pressure 236 P.S.I.
Corrosion Allowance: Heads .0625 Shell .0625

VESSEL WEIGHT: 152,723 #

TOTAL WEIGHT: 152,723 LBS (76.36 TONS)

REFERENCE DRAWINGS
SHELL OIL COMPANY DWG #NAA 54

VESSEL DIMENSIONS

| | Microfilmed | |
|---|---|---|
| WIDTH | Rev | Date |
| HEIGHT | | |
| O.A.L. | | |

THIS DRAWING AND THE INFORMATION IT CONTAINS ARE THE PROPERTY OF AMF BEAIRD, INC. IT IS NOT TO BE TRACED OR COPIED, NOR IS THE INFORMATION TO BE MISUSED IN ANY WAY

# AMF BEAIRD, INC.
SHREVEPORT, LOUISIANA

100,000 GAL. RAW PRODUCT TANK
144" I.D. x 110'-3" SEAM TO SEAM

FOR: BROWN & ROOT, INC.; HOUSTON, TEXAS

| | | | |
|---|---|---|---|
| DRAWN | DAVID | 11/24/65 | ORDER NO. |
| CHECKED | J.W. | 11/24/65 | 161844 |
| APPROVED | TWW | 11-24-65 | SHEET 1 OF |

DRAWING NO

SHEET OF

NOTES:
1. ALL PLATE 5/8" AND THICKER TO BE NORMALIZED PRIOR TO FABRICATION.
2. VESSEL SHALL BE 100% POST WELD HEAT TREATED.
3. [illegible] SHOT, 1500 GRIT, BLAST CLEANING TO FINISH DIA. FINISH DIA. SSPC-SP-5-63. (PAINT TO BE [illegible]
4. [illegible] NPT drilled and tapped weepholes 180° apart. Repads for smaller sized nozzles to have [illegible] and threaded openings. Coat all machined surfaces and studs with rust preventing grease.
5. [illegible] Test with air and soapsuds after welding.
6. [illegible] and level. Run holes to straddle horizontal and vertical center lines of vessel, (unless otherwise noted)
7. [illegible] matter from surfaces to be painted.
8. [illegible] S, B, Z, and B for shop test and ship in place.
9. [illegible] with sound steel plugs before welding. Coat threads before installing plugs with graphite or other suitable compound. [illegible] after welding. Test vessel with 10# steel plugs in all openings except the one used for testing. Check opening used for [illegible] gauge.
10. [illegible] Requires 100% X-RAY ALL HEAD, HEAD TO SHELL, AND SHELL SEAMS PER PARA. UW 11(a). E LOCIS & CIRCUM. SEAMS OF [illegible] NO. 1 & 1-2.
11. [illegible] see Sheet No. 5 unless shown otherwise
12. [illegible] see Sheet No. 2
13. [illegible] see Sheet No. 2
14. [illegible] see Sheet No. 2
15. [illegible] see Sheet No. 2
16. [illegible] 22,836

SHOP NOTES

### WELDING SPECIFICATIONS

| SEAM | WELD PROCEDURE |
|---|---|
| LONG | 111 A |
| GIRTH | 111 A |
| CLOSING | 114 A |
| HEAD-SHELL | 126 |
| HEAD | 117 |

| MARK | NO. REQ'D. | SIZE | ASA RATING | DESCRIPTION | B/M ITEM NO. | FACING | L | E | TYPE | NOZZ. TO SHELL | FLG. TO NECK | B M ITEM NO. | W | X | Y |
|---|---|---|---|---|---|---|---|---|---|---|---|---|---|---|---|
| N-6 | 1 | 6" | 150# | NOZZ (RELIEF VALVE) | 11,17,29 | R.F. | 9 5/16 | 8" | 2 | — | K | 38 | 3/8 | 1/2 | 3/8 |
| N-5 | 1 | 2" | 150# | NOZZ (DRAIN) | 14,17,31 | R.F. | — | 8" | 3 | — | K | — | 3/8 | — | — |
| N-4B | 1 | 3" | 150# | NOZZ (GAUGE COLUMN) | 12,18,30 | R.F. | 9 7/16 | 8" | 2 | — | K | 40 | 3/8 | 9/16 | 3/8 |
| N-4A | 1 | 3" | 150# | NOZZ (GAUGE COLUMN) | 12,18,30 | R.F. | 9 7/16 | 8" | 2 | — | K | 39 | 3/8 | 1/2 | 3/8 |
| N-3 | 1 | 6" | 150# | NOZZ (VAPOR OUTLET) | 11,17,29 | R.F. | 9 5/16 | 8" | 2 | — | K | 38 | 3/8 | 1/2 | 3/8 |
| N-2 | 1 | 12" | 150# | NOZZ (LIQUID OUTLET) | 9,15,27 | R.F. | 16 1/2 | 10" | 1 | — | K | 37 | 5/16 | 5/8 | 3/8 |
| N-1 | 1 | 10" | 150# | NOZZ (INLET) | 10,16,28 | R.F. | 14 1/2 | 8" | 2 | — | K | 36 | 5/16 | 5/8 | 3/8 |
| M-1 | 1 | 18" | 150# | MANWAY 24" O.F. | 3,4,5,6,13 | R.F. | 12 3/4 | 10" | 2 | — | K | 35 | 3/8 | 9/16 | 3/8 |

NOZZLES — SCHEDULE OF OPENINGS

| NO. | DESCRIPTION | BY | DATE | CK. | APV'D |
|---|---|---|---|---|---|
| F | ADDED PAINT + BLAST CLEANING, SHT 7 | PEM | 2/24/66 | LWS | TWW |
| E | ADDED DIM. ON ITEM #41 | PEM | 1/14/66 | | |
| D | 1/2" NTS TO SADDLE ADDS ITEM #45 | PEM | 2/1/66 | | |
| C | ITEMS #25 WAS "16 GA x 5" x 10" | PEM | 12/29/65 | | |
| B | ADDED ITEMS #43, 44, 45; DETAILS "B" & "C" | PEM | 12/14/65 | LWS | TWW |
| A | NOZZ. W. #8 WAS TOO SHORT, EXTENDED. | PEM | 12/14/65 | LWS | TWW |
| | NOZZ. N-5 & 6 ON MAIN BOD. WAS "16 | PEM | 12/14/65 | | |

REVISIONS